RAM MOUNTS | Getac

2023-24 MOUNTING SOLUTIONS

Field Service · Healthcare · Manufacturing · Retail · Transportation · Warehouse

National Products, Inc. | RAM® Mounts

SEEN IN THIS PHOTO:

RAM-101U-247
RAM® Universal Post Clamp Mount with Round Plate - C Size Medium Arm

RAM-HOL-TAB12U
RAM® Tab-Tite™ Universal Spring Loaded Holder for 8" Tablets with Case

RAM-HOL-TAB-RISER1U
RAM® 1/2" Risers for RAM® Tab-Tite™ and RAM® Tab-Lock™ Holders

The Industry Standard

For over 30 years, National Products, Inc. supplies the most rugged and connective mobile device mounting systems on the planet. With the globally recognized RAM® Mounts and award-winning GDS® Tech™ product lines, NPI's mission to bring world-class mounting solutions to real-world applications have become essential to success in all industries — we are the industry standard.

SEEN IN THIS PHOTO:

RAM-234-3FL
RAM® Tough-Tray™ Spring Loaded Laptop Holder with Flat Retaining Arms

RAM-VB-195-SW2
RAM® No-Drill™ Mount for '15-23 Ford F-150, '17-23 F-250 + More

RAM-234-5U
RAM® Power Caddy™ Accessory Holder for RAM® Tough-Tray™

RAM-234-S2U
RAM® Adjustable Laptop Screen Support Arm

SEEN IN THIS PHOTO:

RAM-D-2461U-C-247-4
RAM® 4" Square Post Clamp Mount with 75x75mm VESA Plate

RAM-HOL-GE4PD2KLU
RAM® Locking Power + Dual USB Data Dock for Getac ZX10

Contents

4 | About RAM® Mounts
6 | RAM® Tough-Docks™ for Getac ZX10
8 | RAM® Tough-Docks™ for Getac ZX70
10 | Accessories & Add-ons
12 | RAM® Tab-Tite™ & Tab-Lock™
14 | Compatible Mounts
16 | Laptop Mounts

REZNOR
M102
M103
M104
M105

About RAM® Mounts

RAM® Mounts manufactures rugged and versatile mounting systems for phones, tablets, and other mobile devices that can be attached nearly anywhere. Unlike other mounts on the market, RAM® allows you to secure devices where you need them most. The unique design of the RAM® Mounts system provides quick installation, adjustability, strength, vibration damping, and durability—all at a low cost. Backed by a lifetime warranty, RAM® uses powder-coated, marine-grade aluminum with lightweight and high-strength composites, stainless steel hardware, and rubber balls.

The RAM® Difference

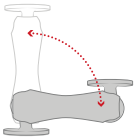

Premium Design

The rubber ball and socket design of our mounting systems offers a secure hold, with near-infinite adjustability and vibration damping for the most demanding environments. With thousands of components trusted by users around the world, we've been able to design and develop mounting solutions that consumers and companies previously only dreamed were possible.

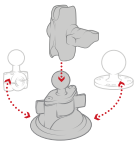

Customizable

Take your phone mount from your truck to your boat, or mix and match components to create your ideal mount. Because of the modularity of the RAM® system, you can customize your solution to fit your specific needs in almost any application.

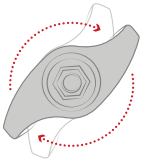

Quality Materials

A premium design deserves the highest quality materials available, from rubber and stainless steel to high-strength composites and marine-grade aluminum. Our facilities— including powder coating, die casting, rubber injection molding, and shock and vibration testing—help us deliver on this promise to bring you inventive mounting solutions.

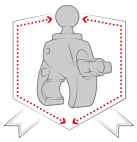

Lifetime Warranty

It's simple. Our reputation as the leader of premier mounting systems means if we build it, then we guarantee it. We're confident in the quality of our products, and with our warranty, you can be too.

*1-3 year warranty on electronics, including powered docks

National Products Inc. (NPI)

Introduced in 1990, National Products Inc. (NPI) quickly became the leading manufacturer of rugged and versatile mounting solutions. RAM® Mounts has grown to offer approximately 5,000 modular components—the most innovative product line of its kind for nearly any application and device, including phones, tablets, GPS systems, laptops, marine electronics, printers, radios, and much more.

In addition to RAM® Mounts, NPI is also the creator of award-winning IntelliSkin® sleeves and GDS® Technology™ products. IntelliSkin® sleeves ruggedize a wide range of consumer phones and tablets, while the GDS® Ecosystem™ provides users the ability to securely charge, dock, and sync devices in the most demanding environments.

NPI is proudly located in Seattle, Washington in the same neighborhood where the company was started.

Partner with RAM® Mounts

Here at RAM® Mounts, we believe that unfathomable things are possible with ingenuity. With a portfolio of more than 5,000 SKUs paired with innovative engineers and in-house product experts, we have the tools and expertise needed to create solutions that you didn't know were possible. We have the ability to solve your mounting challenges quickly, efficiently, and cost effectively.

TOUGH-DOCKS™

RAM® Tough-Dock™ Series for Getac ZX10

Tackle the workday and stay connected in the field with RAM® Mounts form-fit docks built to enable Getac's ZX10 rugged tablet. The RAM® Tough-Docks™ support a custom-tailored approach when identifying your ideal mounting solution, with the following optional features—power, key-locking, and single or dual peripheral support. Pair it with any modular RAM® Mounts components to secure your device anywhere, including forklifts, trucks, workstations, and more.

Getac ZX10					
PART NUMBER	Power	Key Locking	Non-locking	Single USB Peripheral	Dual USB Peripheral
RAM-HOL-GE4U			•		
RAM-HOL-GE4KLU		•			
RAM-HOL-GE4PU	•		•		
RAM-HOL-GE4PKLU	•	•			
RAM-HOL-GE4PDU	•		•	•	
RAM-HOL-GE4PDKLU	•	•		•	
RAM-HOL-GE4PD2U	•		•		•
RAM-HOL-GE4PD2KLU	•	•			•

SEEN IN THIS PHOTO:

RAM-HOL-GE4PD2KLU
RAM® Locking Power + Dual USB Data Dock for Getac ZX10

RAM-D-2461U-C-247-4
RAM® 4" Square Post Clamp Mount with 75x75mm VESA Plate

Patented and Pats. Pend. rammount.com

Features

POGO PINS
Protects device ports from constant plugging and un-plugging.

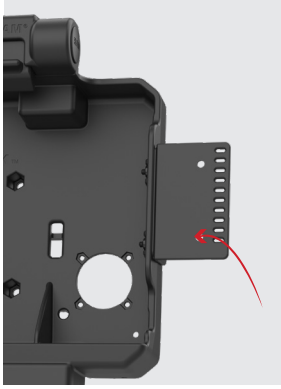

2-HOLE AMPS ACCESSORY ADD-ON BRACKET
Includes a 2-Hole AMPS add-on bracket for accessory or peripheral device mounting such as a phone or scanner.

LIFETIME WARRANTY
Mounting Components

3 YEAR WARRANTY
Electronics

SEE PG.14 FOR COMPATIBLE MOUNTS

RAM® Tough-Dock™ Series for Getac ZX70

Built to compliment the Getax ZX70's "rugged to the core" design, the RAM® Tough-Dock™ includes model-dependent compatibility with two accessories intended to increase the versatility and efficiency of your tablets—the RAM® NFC Extender and the RAM® Temperature Control accessories. Opt for a key-locking model for additional theft deterrence in the field.

Getac ZX70			
PART NUMBER	NFC Compatible	Temperature Regulating	Key Locking
RAM-HOL-GE3NU	•		
RAM-HOL-GE3NKLU	•		•
RAM-HOL-GE3FU		•	
RAM-HOL-GE3FKLU		•	•

SEEN IN THIS PHOTO:

RAM-HOL-GE3NKLU
RAM® Form-Fit Locking Holder for Getac ZX70 - NFC Extender Compatible

RAM-101U-247
RAM® Universal Post Clamp Mount with Round Plate - C Size Medium Arm

Features

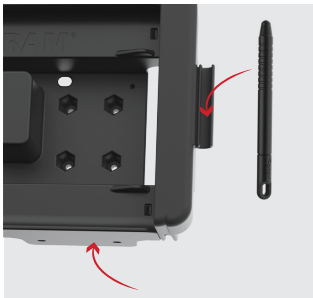

STYLUS PEN + ACCESSORY BRACKET COMPATIBLE
Integrated Stylus holder and 2-Hole AMPS add-on bracket for accessory or peripheral device mounting.

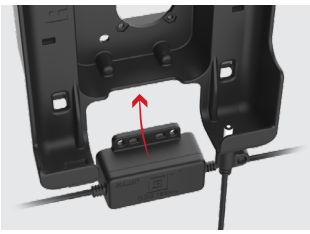

GDS® CHARGER
Maintain a consistent power connection to your fleet of devices with the GDS® Modular Hardwire Charger.

Add-on Accessories

RAM-GDS-CHARGE-V9U
GDS® 20-60VDC Input (12VDC Output) Hardwire Charger with Male DC 5.5mm

RAM-GDS-CHARGE-V10U
GDS® 10-32VDC Input (12VDC Output) Hardwire Charger with Male DC 5.5mm

SEE PG.14 FOR COMPATIBLE MOUNTS

Accessories & Add-ons

Located on the back of your dock are designated housings for optional accessories intended to support your tablet in extreme weather conditions and decrease the number of docking and un-docking experiences necessitated by your workflow. Explore the RAM® temperature control accessories and NFC Extender.

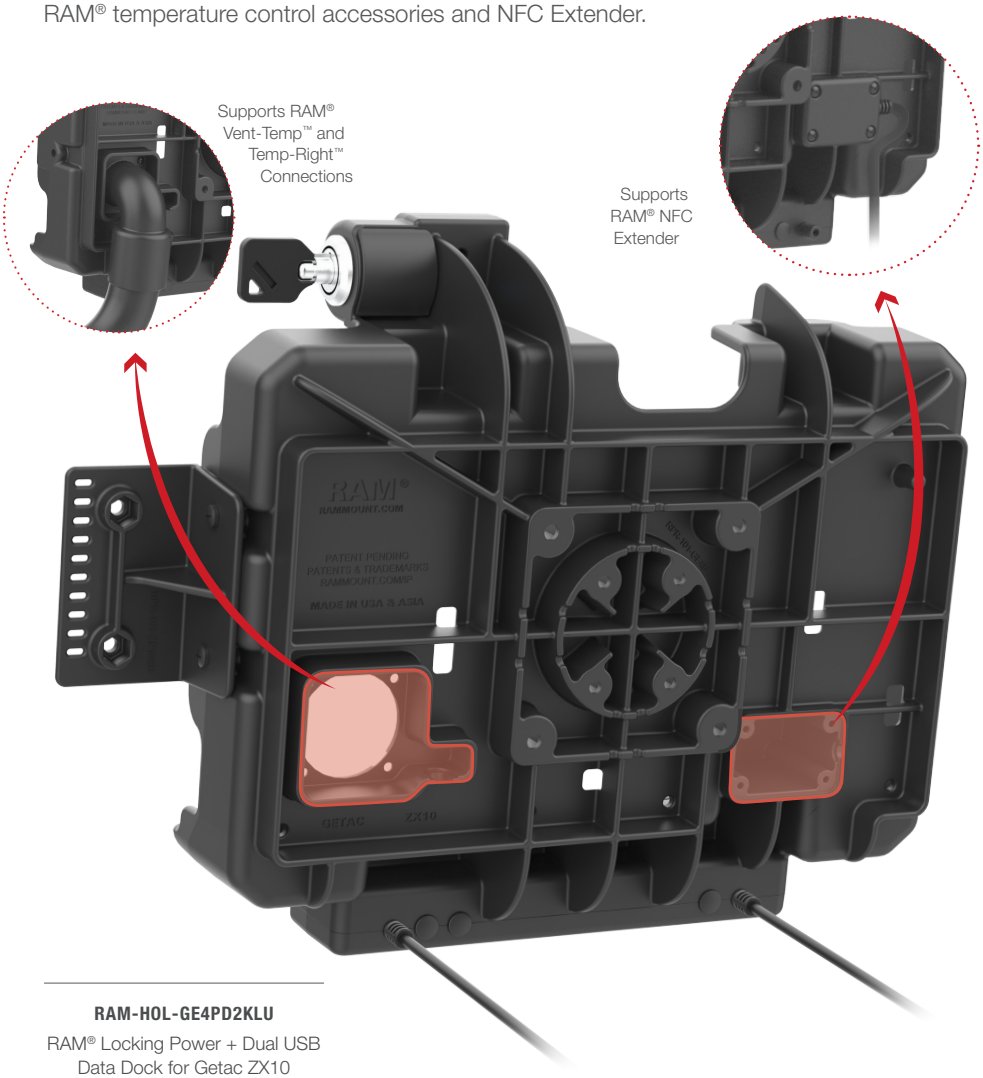

RAM-HOL-GE4PD2KLU
RAM® Locking Power + Dual USB Data Dock for Getac ZX10

RAM® NFC Extender Add-on

RAM-GDS-CAB-NFCU
RAM® NFC Extender

RAM-B-102-NFCU
RAM® NFC Extender
with Drill-Down Double Ball Mount

NFC ATTACHMENT METHODS

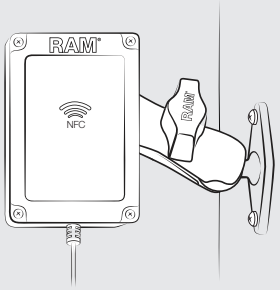

Double Ball Mount:
Flat Surface

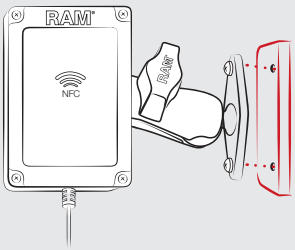

Double Ball Mount:
Direct to Dock

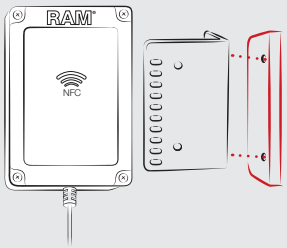

Direct to Dock:
90° Bracket

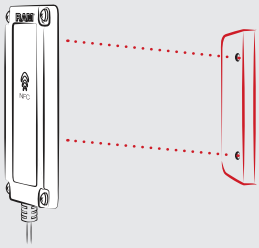

Direct to Dock:
Low-Profile

RAM® Temperature Control Add-on

Easily install either the RAM® Vent-Temp™ which connect to your vehicle's vents or the RAM® Temp-Right™, which provides regulated heat in extremely cold environments.

RAM-VENT1-RND-50U
RAM® Vent-Temp™ with Back Dock Connection for Round Vents

RAM-VENT1-RCT-50U
RAM® Vent-Temp™ with Back Dock Connection for Rectangular Vents

TEMP-RIGHT
RAM® Temp-Right™ Dock Heating Module

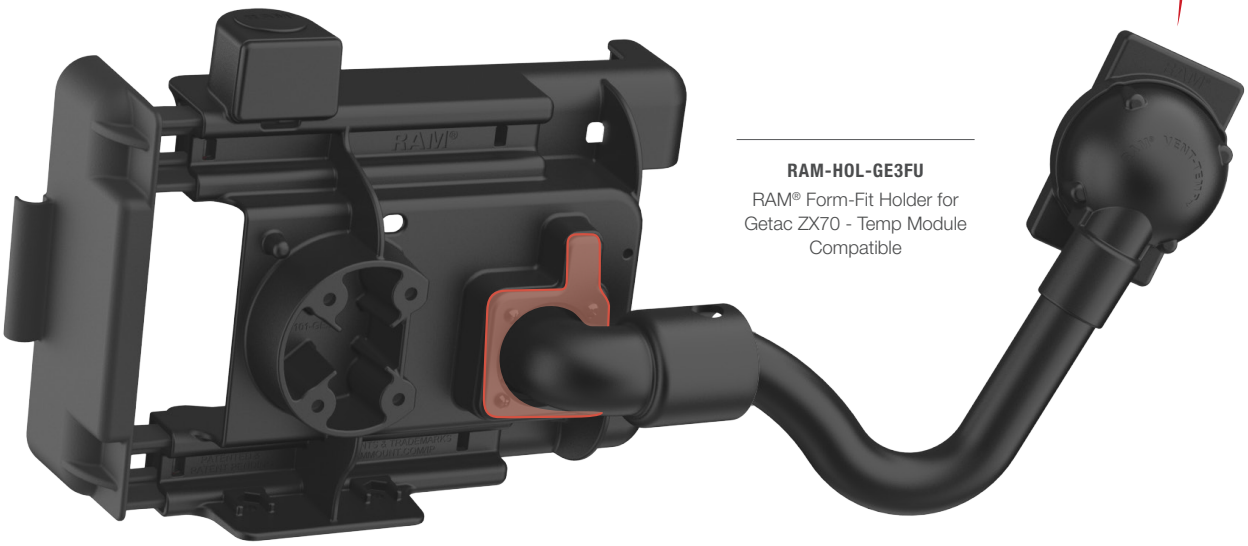

RAM-HOL-GE3FU
RAM® Form-Fit Holder for Getac ZX70 - Temp Module Compatible

SEEN IN THIS PHOTO:

RAM-B-102-NFCU
RAM® NFC Extender with Drill-Down Double Ball Mount

Add-on Compatibility

Getac ZX70

PART NUMBER	NFC Compatible	Temperature Regulating
RAM-HOL-GE3NU	•	
RAM-HOL-GE3NKLU	•	
RAM-HOL-GE3FU		•
RAM-HOL-GE3FKLU		•

Note: All Getac ZX10 docks support RAM® Vent-Temp™, Temp-Right™, and RAM® NFC Reach™ NFC Extender connections.

RAM® Tab-Tite™ & Tab-Lock™ Holders

The RAM® Tab-Tite™ & Tab-Lock™ are rugged, universal tablet holders that are available in locking and non-locking options, can support tablets with or without a case, and can be mounted virtually anywhere. The spring-loaded design makes it easy to insert and remove your tablet while keeping it secure. The RAM® Tab-Tite™ & Tab-Lock™ product lines are future-proof—simply modify the holder.

Tab-Tite™ & Tab-Lock™ for ZX10 and UX10

RAM-HOL-TAB19U
RAM® Tab-Tite™ Holder for 10”-11” Rugged Tablets

RAM-HOL-TABL19U
RAM® Tab-Lock™ Holder for 10”-11” Rugged Tablets

Risers are required

Tab-Tite™ & Tab-Lock™ for ZX70

RAM-HOL-TAB12U
RAM® Tab-Tite™ Universal Spring Loaded Holder for 8” Tablets with Case

RAM-HOL-TABL12U
RAM® Tab-Lock™ Universal Spring Loaded Holder for 8” Tablets with Case

FEATURES

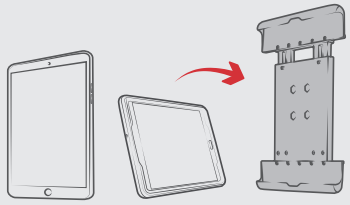

Supports tablets in portrait and landscape mode

Made of high-strength composites for durability and reliability in the most demanding environments

Risers are required to secure your Getac ZX70 device in either the RAM® Tab-Tite™ or RAM® Tab-Lock™

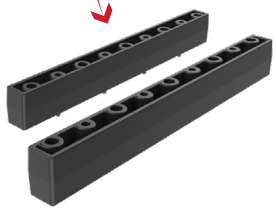

RAM-HOL-TAB-RISER1U
RAM® ½" Risers for RAM® Tab-Tite™ and RAM® Tab-Lock™ Holders

SEEN IN THIS PHOTO:

RAM-101U-247
RAM® Universal Post Clamp Mount with Round Plate - C Size Medium Arm

RAM-HOL-TAB-SAM29U
RAM® Tab-Lock™ Universal Spring Loaded Holder for 8" Tablets with Case

RAM-HOL-TAB-RISER1U
RAM® 1/2" Risers for RAM® Tab-Tite™ and RAM® Tab-Lock™ Holders

SEE PG.14 FOR COMPATIBLE MOUNTS

Compatible Mounts for ZX10

For ZX10 Docks, C Size 2.25” Ball Mounts Recommended for Light-Duty Mounting (Vehicle & Static Environments) and D Size 2.25” Ball Mounts

RAM-D-101U-246
RAM® Double Ball Mount with 100x100mm VESA Plate - D Size Medium

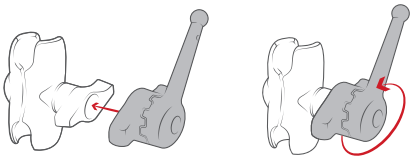

This wrench (**RAM-KNOB9HU**) provides the **extra leverage** needed to tighten the mount in cold weather or in small spaces.

BEST FOR **VEHICLES**

RAM-VP-89F-D-101-2461U
RAM® Tele-Pole™ with 8” & 9” Poles and 75mm VESA Mount

ZX10 Accessory Highlight:
Mobile Office

RAM® Mounts are designed with modularity in mind to provide an efficient workflow for workers on-the-go. Consider including a keyboard in your next deployment to enable faster data input while seamlessly integrating it into your mounting solution with the RAM® Heavy Duty Accessory Display Bracket.

Note: You have to select a RAM® Tough-Dock™ with peripheral support in order for keyboard connection to work

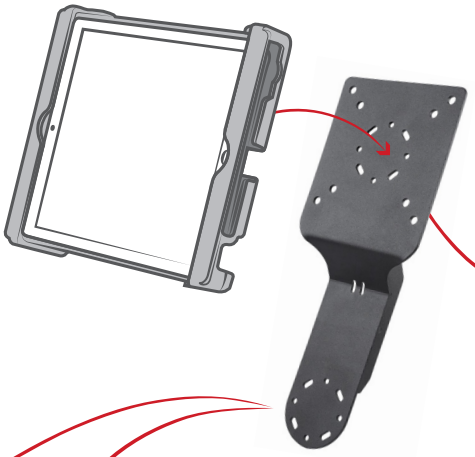

RAM-DIS-103-2AU
RAM® Standard Heavy Duty Accessory/Display Bracket

BEST FOR **FORKLIFTS**

RAM-D-2461U-C-247-4
RAM® 4” Square Post Clamp Mount with 75x75mm VESA Plate

OR

RAM-KB2-USB
GDS® Keyboard™ with Track Pad

RAM-KB4-USB
GDS® Keyboard™ with 10-Key Numeric Pad

Compatible Mounts for ZX70

For ZX70, Tab-Tite & Tab-Lock Products, C Size 1.5” Ball Mounts Recommended

BEST FOR **VEHICLES**

RAM-101-B-225B2U
RAM® Drill-Down Dashboard Mount with Backing Plate - C Size Short

RAP-401-202U
RAM® Tough-Claw™ Large Clamp Double Ball Mount with Round Plate

RAM-101U
RAM® Double Ball Mount with Two Round Plates - C Size Medium

BEST FOR **FORKLIFTS**

RAM-101U-247
RAM® Universal Post Clamp Mount with Round Plate - C Size Medium Arm

RAP-365-101U
RAM® Twist-Lock™ Triple Suction Cup Mount with Round Plate

COMING SOON
RAM® 6-Port Charging Dock for Getac ZX70

The articulating swing arm, lower mount, and flange pole base **allow for full 360-degree rotation and additional RAM® socket arm for ideal placement** of multile devices such as a keybord + tablet.

RAM-VP-SW2F-89
RAM® Tele-Pole™ with 8” & 9” Poles and Double Ball Mount

SEEN IN THIS PHOTO:

RAM-101U-247
RAM® Universal Post Clamp Mount with Round Plate - C Size Medium Arm

RAM-HOL-TAB12U
RAM® Tab-Tite™ Universal Spring Loaded Holder for 8” Tablets with Case

RAM-HOL-TAB-RISER1U
RAM® 1/2” Risers for RAM® Tab-Tite™ and RAM® Tab-Lock™ Holders

RAM® Tough-Tray™ for Rugged Laptops

The RAM® Tough-Tray™ is a spring-loaded expandable tray that can accommodate up to 17.5” Laptops. Four-sided clamping arms with rubber grips can be moved both vertically and horizontally, allowing for a custom fit for varying sizes of laptops and the freedom of not blocking ports or drives.

The famous RAM® No-Drill™ design adapts to the passenger side front seat bolts of your vehicle, with adjustable Tele-Pole & Swing Arm components to support your laptop in a position that is easily accessible to the driver, leaves room for the passenger, and does not interfere with airbag deployment. In addition, the ball and socket system at the end of the swing arms allow you to angle your laptop for optimal wrist comfort.

Spring-loaded universal laptop tray accommodates up to 17.5” laptops

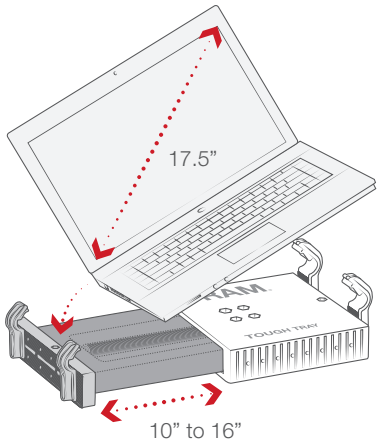

RAM-234-3FL
RAM® Tough-Tray™ Spring Loaded Laptop Holder with Flat Retaining Arms

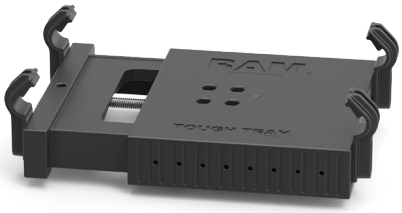

RAM-234-3
RAM® Tough-Tray™ Spring Loaded Laptop Holder

SEEN IN THIS PHOTO:

RAM-VB-195-SW1
RAM® No-Drill™ Laptop Mount for ‘17-23 Ford F-Series + More

BEST SELLER

RAM-VB-195-SW1
RAM® No-Drill™ Laptop Mount for '17-20 Ford F-Series + More

RAM-VB-178A-SW1
RAM® No-Drill™ Laptop Mount for '12-23 RAM 2500-5500 + More

RAM-VB-203-SW1
RAM® No-Drill™ Laptop Mount for '14-19 Chevrolet Silverado + More

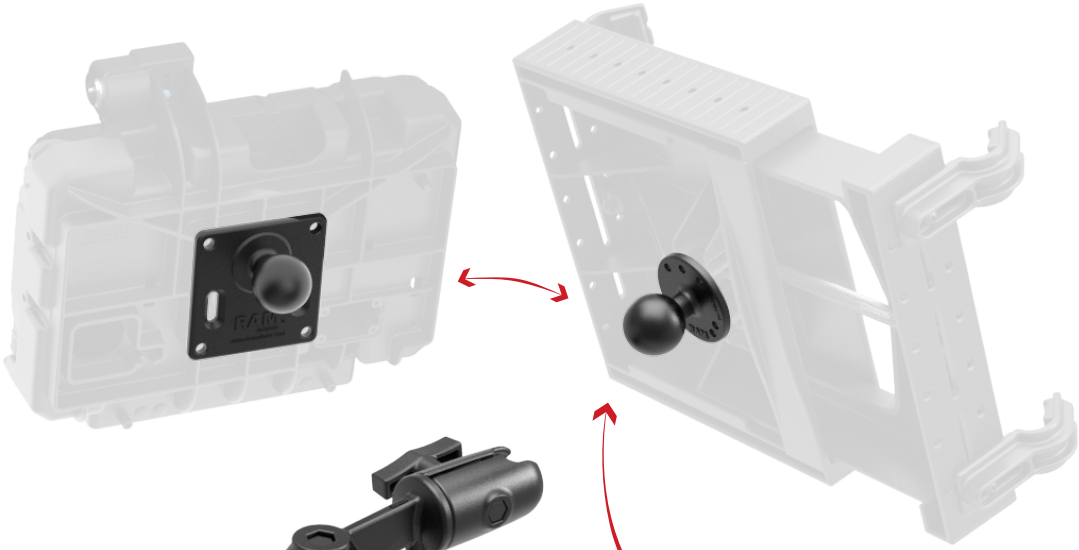

Swap Your Devices

Whether you're replacing tablets with laptops or vice versa, the RAM® Mounts future-proofed ecosystem allows you to swap out your device holder without replacing your entire mounting solution.

RAM-202U
RAM® Round Plate with Ball - C Size

RAM MOUNTS

GDS TECH

IntelliSkin

Mount Anything, Anywhere

Getac

rammount.com
1.800.497.7479
sales@rammount.com

IntelliSkin GDS TECH

GDS®, IntelliSkin®, GDS® Tech™, GDS® Technology™, GDS® Green™, GDS® Reach™, and GDS® Compatible™ are trademarks or registered trademarks of National Products Inc.

The distinctive D Shape™ of the GDS® connector is a trademark of National Products Inc.

RAM® double socket arms with their distinctive Hourglass Shape are recognized globally as a symbol of the reliability, quality, and durability of this line of products. The Hourglass Shape is a registered trademark of National Products Inc.

The distinctive RAM® "X-Grip®" product shape is a trademark of National Products Inc.

Look for the highly recognizable "Double Delta" trademark, the symbol of quality and reliability

NATIONAL PRODUCTS INC. PRODUCTS DISCLAIMER & LEGAL INFO • RAMMOUNT.COM/IP

NEVER USE MOBILE COMPUTING OR COMMUNICATION EQUIPMENT WHILE A VEHICLE IS IN MOTION

RAM® Mounts are designed for dynamic mounting applications but are not intended to be used in excess of reasonable load limits. National Products Inc., maker of RAM® Mounts, expressly denies any liability for a product failure and assumes no responsibility for lost or damaged mounting systems. National Products Inc. assumes no liability for injuries or any other losses sustained while using these products. RAM® Mounts should not be used in such a manner as to distract the operator from the operation of vehicles or other devices, or to create any safety hazards.

D" product shape, "Hourglass" product shape, 3-D Float, Adapt-A-Post, Adapt-To-RAM, Add-A-Ball, Adjust-A-Pole, Always Protected. Always Connected., Aqua Box, Aqua-Box, Bond-A-Base, D Shape, Dock-N-Lock, Drop-N-Lock, EZ-On/Off, EZ-Roll'r, EZ-Strap, EZY-Mount, Finger-Grip, Flex-Arm, Flex-Base, Flex-Lens, Flex-Rod, GDS, GDS Audio, GDS Case, GDS Charge, GDS Compatible, GDS Cradle, GDS Cup, GDS Dock, GDS Ecosystem, GDS Ergo, GDS Green, GDS Hub, GDS Keyboard, GDS Service, GDS Skin, GDS Sleeve, GDS Tech, GDS Technology, GDS View, Go-Dock, Hand-Track, HandStand, Handi-Case, IntelliSkin, IntelliSkin Compatible, IntelliSkin HD, Just RAM It!, Latch-N-Lock, Level Cup, Level-Base, Light-Speed, Lil Buddy, MDT-Mate, Mari-Nut, Mari-Rivet, Mighty-Buddy, Mirror-Mate, Multi-Pad, No-Drill, Power Caddy, Power Plate, Power-Grip, Press-N-Lock, Quick Snap, Quick-Draw, Quick-Grip, RAM, RAM "X-Grip" product shape, RAM Bow-Cam, RAM Compatible, RAM Mount, RAM Mounting Systems, RAM Mounts, RAM Mounts Compatible, RAM Pin-Lock, RAM Pod, RAM Pod HD, RAM ROD, RAM Ratchet, RAM Ratchet Arm, RAM Ratchet Swing Arm, RAM Tube, RAM Tube Jr, RAM X-Grip, RAM-A-CAN, RAM-A-SNACK, Remove-A-Pole, Roller-Ball, Roto-View, Round-A-Mount, Safe-N-Secure, Safe-T-Charge, Seat Mate, Seat-Mate, Secure-N-Motion, Shock Buster, Slide Dock, Slide-N-Lock, Snap-C on, Snap-Link, Stack-N-Stow, Stubby, Tab-Lock, Tab-Tite, Team RAM, Tele-Mount, Tele-Pole, Tilt-N-Turn, Torque, Torque-Track, Tough-Ball, Tough-Box, Tough-Clamp, Tough-Claw, Tough-Cleat, Tough-Clip, Tough-Dock, Tough-Hub, Tough-Pole, Tough-Tap, Tough-Track, Tough-Tray, Tough-Tube, Tough-Wedge, Track Ball, Track-Node, Twist-Lock, Twist-N-Tilt, Twist-N-Turn, Uni-Conn, Wedge-Lock, Your Best Connection, are either registered trademarks or trademarks of National Products Inc. in the United States and or other countries.